REV	DESCRIPTION OF REVISION	By	DATE	APPROVED
A	INITIAL RELEASE	C. Cai	2022/5/26	C. Chen

TECHNICAL DATA

▶ Electrical Data

Frequency Range	3.1~3.6GHz
Insertion Loss	0.5dB max
VSWR	1.25:1 max
Isolation	19dB min
Forward Power	60W(CW)
Direction	Clockwise
Impedance	50 Ohms

▶ Mechanical Data

Dimensions	12.7×12.7×7.2mm
Connector Type	Microstrip
Material	Aluminum
Surface Finish	Nickel Plated

▶ Environmental Data

Operating Temperature	-30℃~+75℃
Storage Temperature	-50℃~+90℃

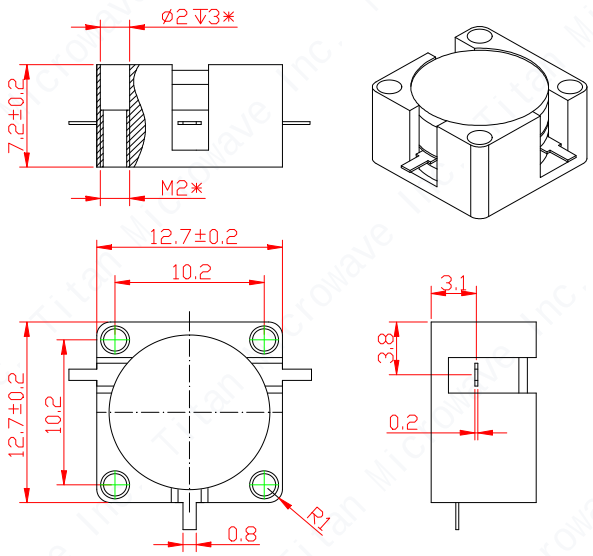

Notes:

1. ALL SPECIFICATIONS ARE SUBJECT TO CHANGE WITHOUT NOTICE AT ANY TIME
2. CUSTOMER OUTLINE DRAWING FOR REFERENCE ONLY

DRAWN: L. Ma 26/05/22

ENGINEER: J. Zhu 26/05/22

APPROVED: C. Chen 26/05/22

TOLERANCE UNLESS OTHERWISE SPECIFIED

x	±0.50	[0.019"]
.x	±0.20	[0.008"]
.xx	±0.10	[0.004"]
ANGLES	±1°	

TITLE:

Drop-in Circulator,
3.1~3.6GHz,
60W, Clockwise

PART No.:

TMDC-03100360-60

成都巨人微波
TITAN MICROWAVE INC.
- A Professional RF & Microwave Components Supplier -
www.titan-microwave.com

DIMENSIONS IN MILLIMETERS(mm)

SIZE:	SCALE:	SHEET:	REV:
A4		1/1	A