REV	DESCRIPTION OF REVISION	By	DATE	APPROVED
A	INITIAL RELEASE	C. Cai	2022/3/15	C. Chen

TECHNICAL DATA

▶ Electrical Data

Frequency Range	2~4GHz
Insertion Loss	0.5dB max
VSWR	1.3:1 max
Isolation	18dB min
Forward Power	150W
Reverse Power	100W

▶ Mechanical Data

Dimensions	32×44×21mm
Connector Type	Stripline
Surfave Finish	Nickel Plated

▶ Environmental Data

Operating Temperature	-10℃~+60℃
Storage Temperature	-50℃~+90℃

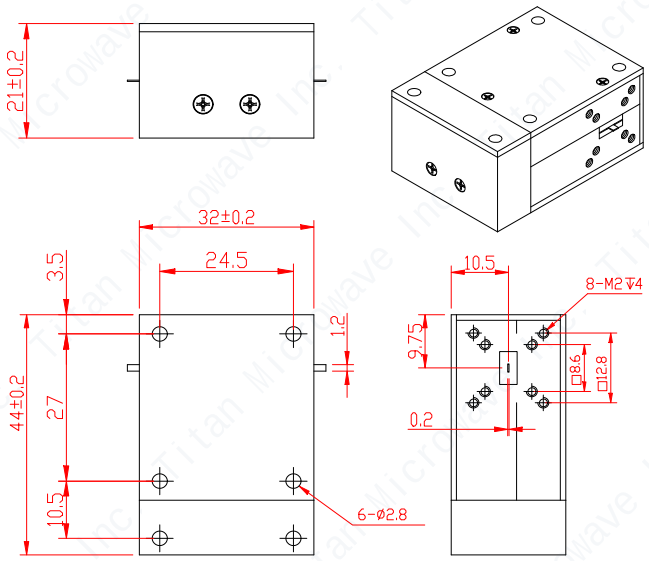

Notes:

1. ALL SPECIFICATIONS ARE SUBJECT TO CHANGE WITHOUT NOTICE AT ANY TIME
2. CUSTOMER OUTLINE DRAWING FOR REFERENCE ONLY

DRAWN: L. Ma 15/03/22

ENGINEER: J. Zhu 15/03/22

APPROVED: C. Chen 15/03/22

TOLERANCE UNLESS OTHERWISE SPECIFIED

x	±0.50	[0.019"]
.x	±0.20	[0.008"]
.xx	±0.10	[0.004"]
ANGLES	±1°	

TITLE:

Drop-in Isolator
2-4GHz, 150W,
Clockwise

PART No.:

TMDI-02000400-150A

成都巨人微波
TITAN MICROWAVE INC.
- A Professional RF & Microwave Components Supplier -
www.titan-microwave.com

DIMENSIONS IN MILLIMETERS(mm)

SIZE:	SCALE:	SHEET:	REV:
A4		1/1	A